ANNOUNCED SPECIFICATION OF HS-75BB RETRACT SERVO

1.TECHNICAL VALUES

CONTROL SYSTEM	:	+PULSE WIDTH CONTROL 1500usec NEUTRAL	
OPERATING VOLTAGE RANGE	:	4.8V TO 6.0V	
OPERATING TEMPERATURE RANGE	:	−20 TO +60℃	
TEST VOLTAGE	:	AT 4.8V	AT 6.0V
OPERATING SPEED	:	0.45sec/60° AT NO LOAD	0.34sec/60° AT NO LOAD
STALL TORQUE	:	6.6kg.cm(91.65oz.in)	8.2kg.cm(113.87oz.in)
OPERATING ANGLE	:	170°/ONE SIDE PULSE TRAVELING 400usec	
DIRECTION	:	CLOCK WISE/PULSE TRAVELING 1400 TO 1600usec	
CURRENT DRAIN	:	1mA/IDLE AND 150mA/NO LOAD RUNNING	
DEAD BAND WIDTH	:	20usec	
CONNECTOR WIRE LENGTH	:	300mm(11.81in)	
DIMENSIONS	:	44x23x25mm(1.73x0.90x0.98in)	
WEIGHT	:	35g(1.23oz)	

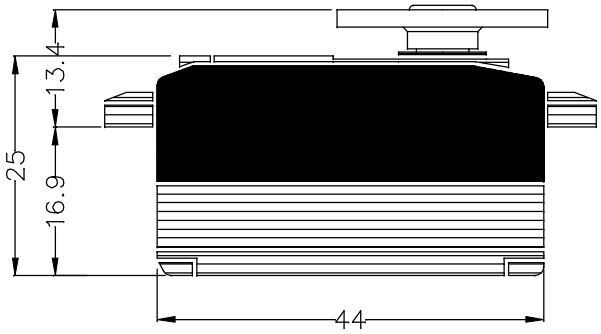

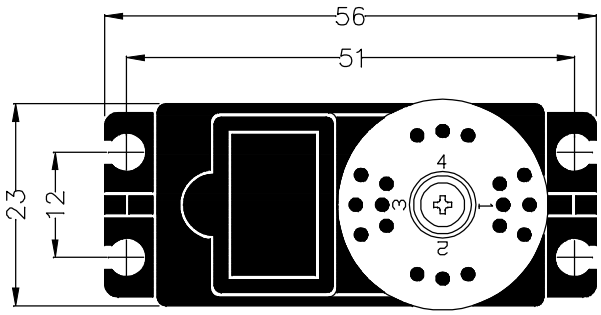

2.FEATURES

3-POLE FERRITE MOTOR
LONG LIFE POTENTIOMETER
WATER AND DUST TIGHT
INDIRECT SWITCH DRIVE
ONE METAL AND FOUR POM RESIN GEARS
ONE BALL BEARING
HYBRID I.C

3.APPLICATIONS

RETRACT SERVO FOR AIRCRAFT
180° ROTATION