ANNOUNCED SPECIFICATION OF HS-805BB?+? MEGA 1/4 SCALE SERVO

1.TECHNICAL VALUES

CONTROL SYSTEM	: +PULSE WIDTH CONTROL 1500usec NEUTRAL	
OPERATING VOLTAGE RANGE	: 4.8V TO 6.0V	
OPERATING TEMPERATURE RANGE	: −20 TO +60°C	
TEAT VOLTAGE	: AT 4.8V	AT 6.0V
OPERATING SPEED	: 0.19sec/60° AT NO LOAD	0.14sec/60° AT NO LOAD
STALL TORQUE	: 19.8kg.cm(274.96oz.in)	24.7(343.01oz.in)
OPERATING ANGLE	: 45°/ONE SIDE PULSE TRAVELING 400usec	
DIRECTION	: CLOCK WISE/PULSE TRAVELING 1500 TO 1900usec	
CURRENT DRAIN	: 8mA/IDLE AND 700mA/NO LOAD RUNNING	
DEAD BAND WIDTH	: 8usec	
CONNECTOR WIRE LENGTH	: 300mm(11.81in)	
DIMENSIONS	: 66x30x57.6mm(2.59x1.18x2.26in)	
WEIGHT	: 152g(5.36oz)	

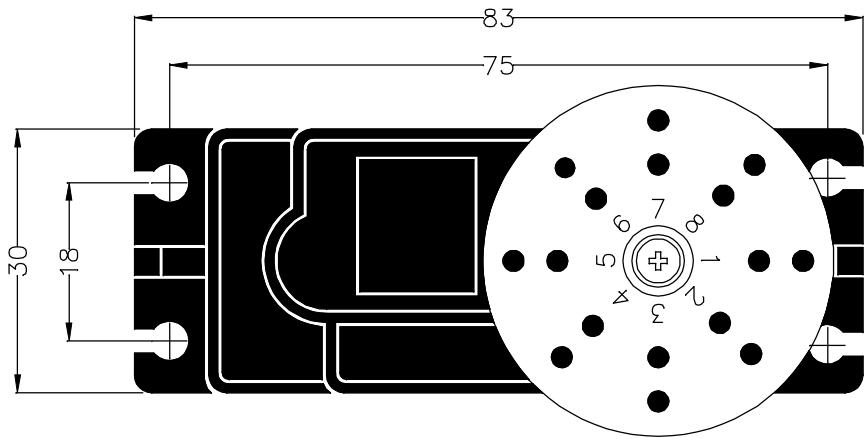

2.FEATURES

3−POLE FERRITE MOTOR
LONG LIFE POTENTIOMETER
DUAL BALL BEARING
INDIRECT POTENTIOMETER DRIVE
WATER & DUST TIGHT

3.APPLICATIONS

GIANT SCALE AIRCRAFT
1/4 SCALE CARS
LARGE SCALE BOATS